PLANATORY MIXER
SHAKTI CE

PLANATORY MIXER
SHAKTI CE

PLANATORY MIXER
SHAKTI CE

PLANATORY MIXER
SHAKTI CE

PLANATORY MIXER
SHAKTI CE

PLANATORY MIXER
SHAKTI CE

PLANATORY MIXER
SHAKTI CE

PLANATORY MIXER
SHAKTI CE

PLANATORY MIXER
SHAKTI CE

SHAKTI CE

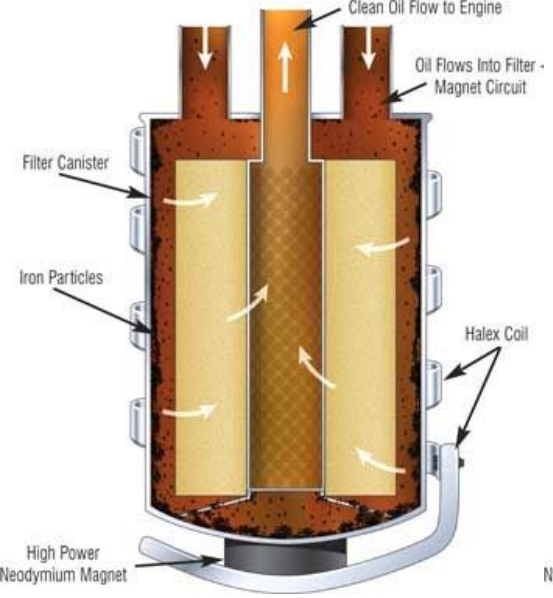
Clean Oil Flow to Engine
Oil Flows Into Filter - Magnet Circuit
Filter Canister
Iron Particles
Halex Coil
High Power Neodymium Magnet

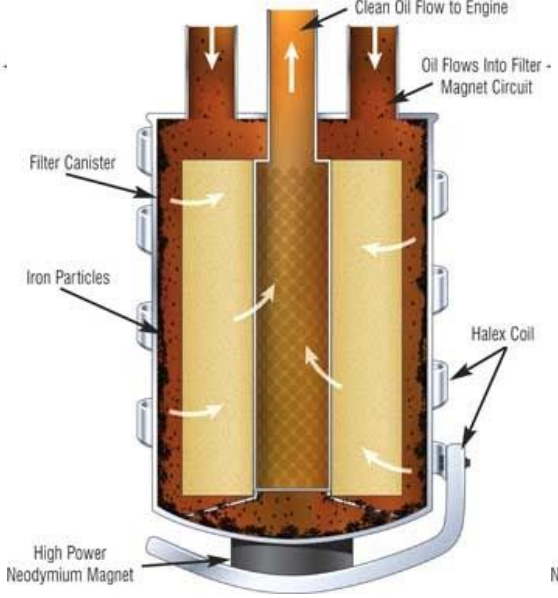
Clean Oil Flow to Engine
Oil Flows Into Filter - Magnet Circuit
Filter Canister
Iron Particles
Halex Coil
High Power Neodymium Magnet

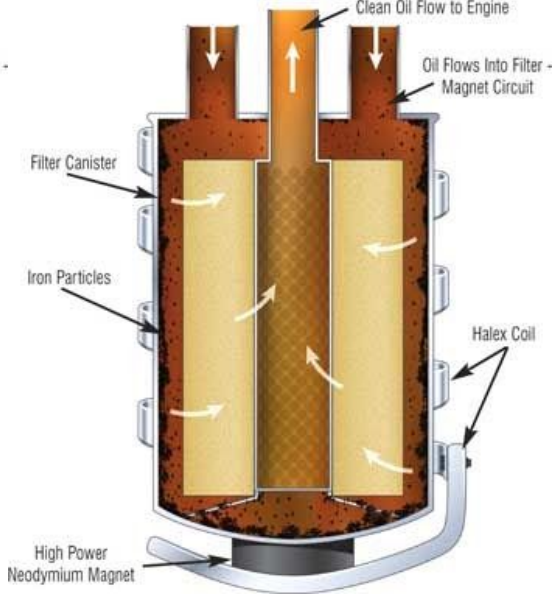
Clean Oil Flow to Engine
Oil Flows Into Filter - Magnet Circuit
Filter Canister
Iron Particles
Halex Coil
High Power Neodymium Magnet

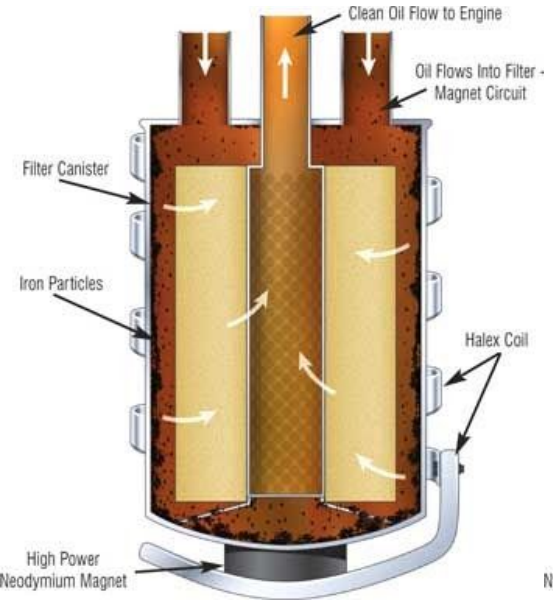
Clean Oil Flow to Engine
Oil Flows Into Filter - Magnet Circuit
Filter Canister
Iron Particles
Halex Coil
High Power Neodymium Magnet

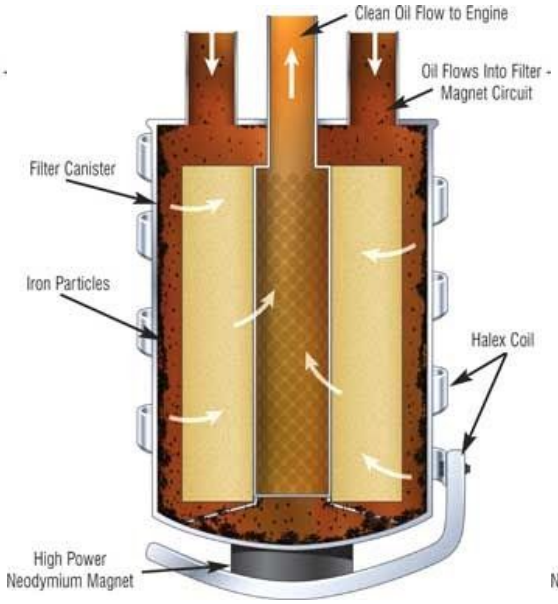
Clean Oil Flow to Engine
Oil Flows Into Filter - Magnet Circuit
Filter Canister
Iron Particles
Halex Coil
High Power Neodymium Magnet

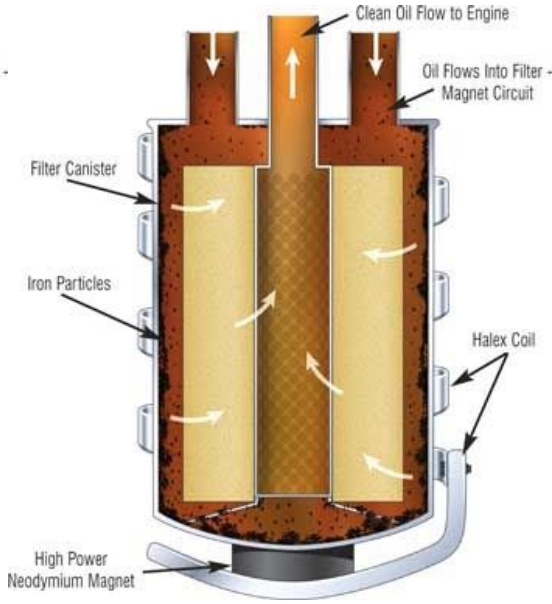
Clean Oil Flow to Engine
Oil Flows Into Filter - Magnet Circuit
Filter Canister
Iron Particles
Halex Coil
High Power Neodymium Magnet

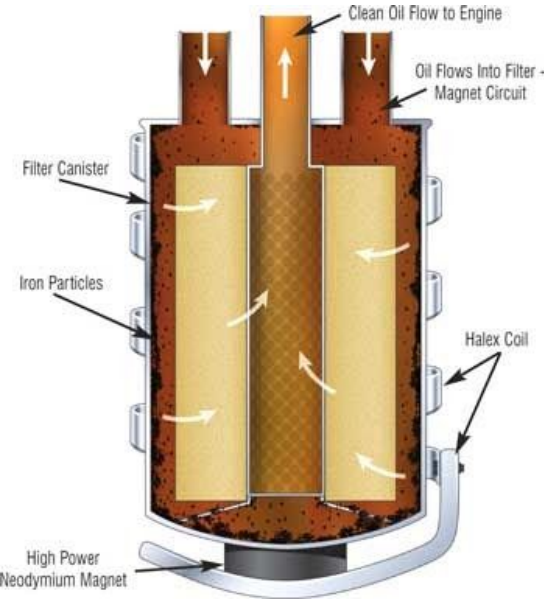
Clean Oil Flow to Engine
Oil Flows Into Filter - Magnet Circuit
Filter Canister
Iron Particles
Halex Coil
High Power Neodymium Magnet

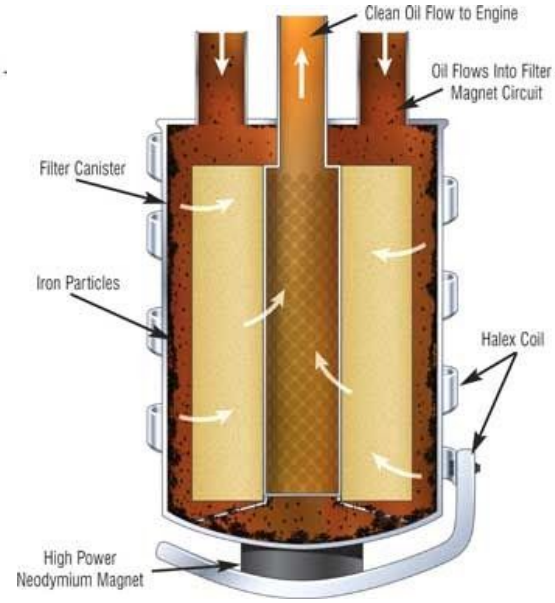
Clean Oil Flow to Engine
Oil Flows Into Filter - Magnet Circuit
Filter Canister
Iron Particles
Halex Coil
High Power Neodymium Magnet

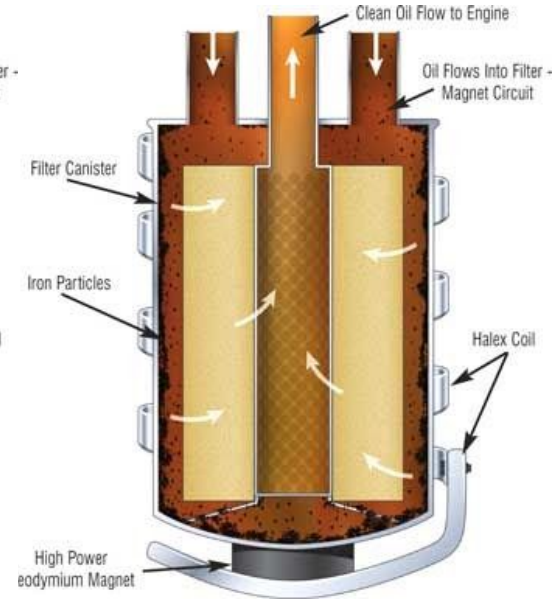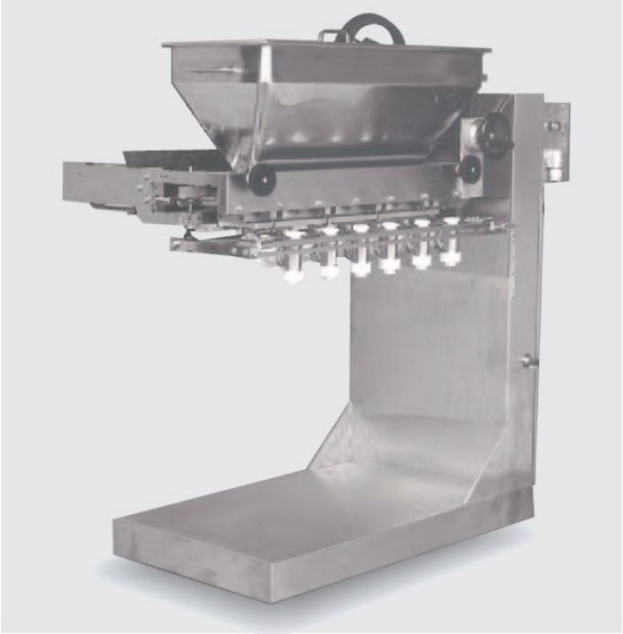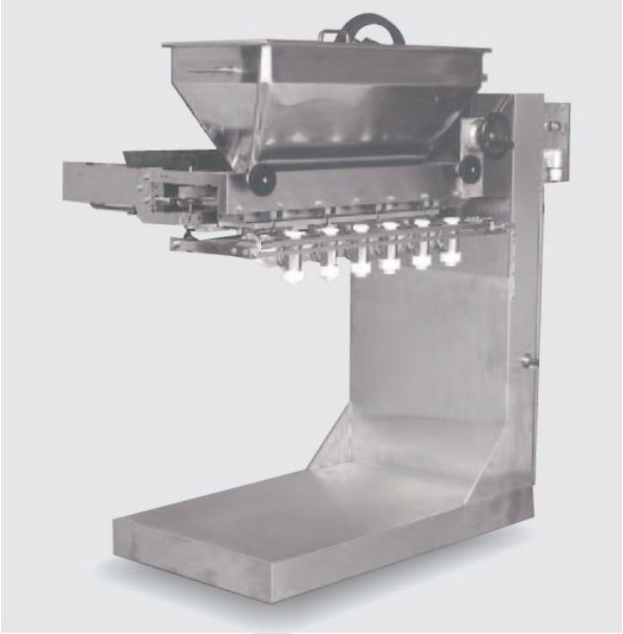
Clean Oil Flow to Engine
Oil Flows Into Filter - Magnet Circuit
Filter Canister
Iron Particles
Halex Coil
High Power eodymium Magnet